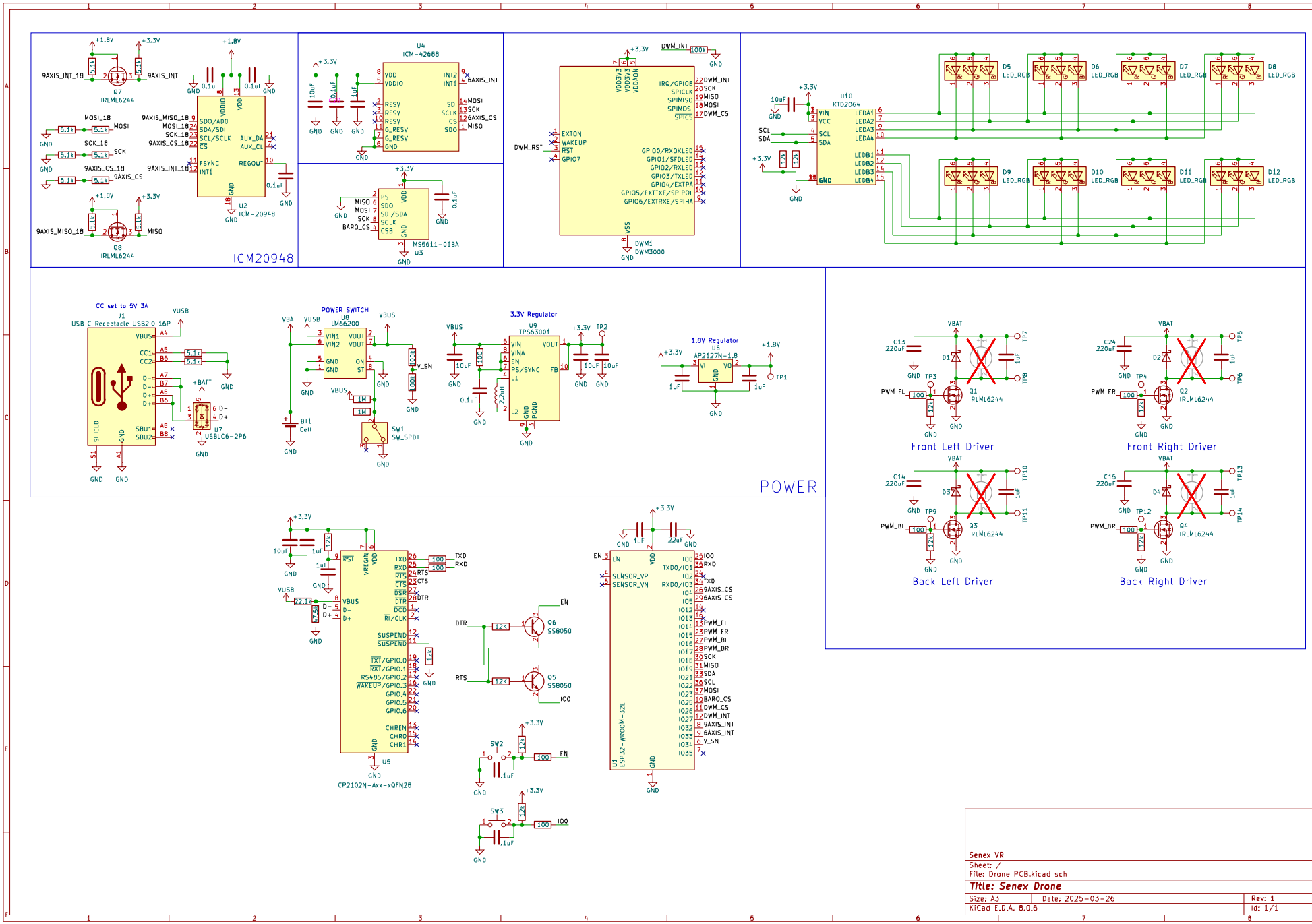

Senex VR

Sheet: /

File: Drone PCB.kicad_sch

Title: Senex Drone

Size: A3	Date: 2025-03-26	Rev: 1
KiCad E.D.A. 8.0.6		Id: 1/1